RoHS	This products can apply to the SWB Doc NO. QA-3-04-005 of Environmental&Material Management Rules

RD-1

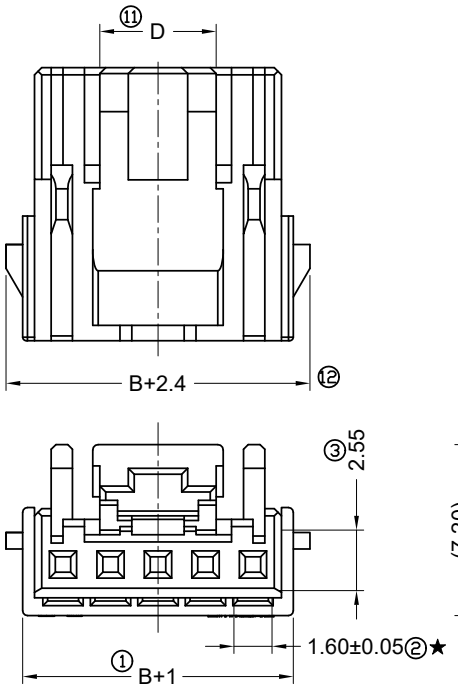

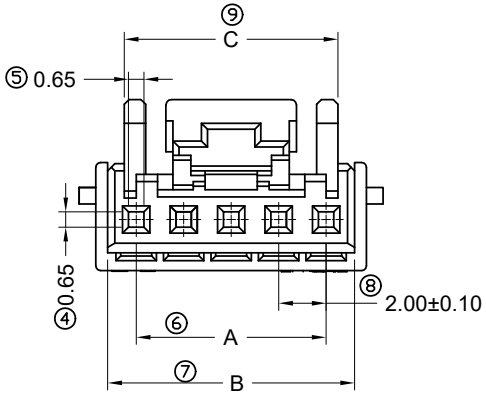

■ Specifications :

- Voltage rating: 250V AC / DC
- Current rating: 3A AC / DC
- Withstanding voltage: 800V AC/minute
- Temperature range: -40°C~+125°C
- Insulation resistance:≥1000MΩ
- Contact resistance: ≤10mΩ
- After environmental testing: ≤20mΩ

2019 H -1xXX -N0 N B R 01 Q
① ② ③ ④ ⑤ ⑥ ⑦ ⑧ ⑨

① Series No.
② Category：H-HSG
③ Row No.-Pin No.: 1xXX-02P~05P
④ Material : N0-PA66 94V-0
⑤ Color : N-Natural
⑥ Packing:B-Bag
⑦ R-RoHS
⑧ Special No.:
⑨ Q-Automotive products

Poles	Dimensions (mm)			
	A	B	C	D
02	2.00	4.40	3.20	2.10
03	4.00	6.40	5.00	3.90
04	6.00	8.40	6.60	4.90
05	8.00	10.40	9.00	4.90

2019H-1xXX-N0NBR01Q	Nylon 66 94V-0	C2019	2019T	2000W
PART N0	Material	Suitable SWB Retainer	Suitable SWB Terminal	Suitable SWB Header

DATE	REV	ECN NO.	DESCRIPTION	MODIFY	APPROVAL
2020.03.28	C	ER2020032802	Add material marking	Xiaohu Jiang	Harvey Yan
2019.10.07	B		Add fool-proof feature for 2p~4p	Larry Yang	Harvey Yan

GENERAL TOLERANCE
.X ±0.30
.XX ±0.20
.XXX ±0.10
X.° ±2°
PROJECT

东莞市思索连接器有限公司
SWB CONNECTORS CO.,LTD

APPROVAL	CHECK	DRAWN	DATE
Kim Huang	Harvey Yan	Larry Yang	2019/10/07

PART NO. 2019H-1xXX-N0NBR01Q
TITLE 2.00mm Connector Housing (Retainer mountable type)

UNIT	SCALE	SHEET	REV	NUMBER
mm	1:1	1/2	C	A-022

RoHS	This products can apply to the SWB Doc NO. QA-3-04-005 of Environmental&Material Management Rules

RD-1

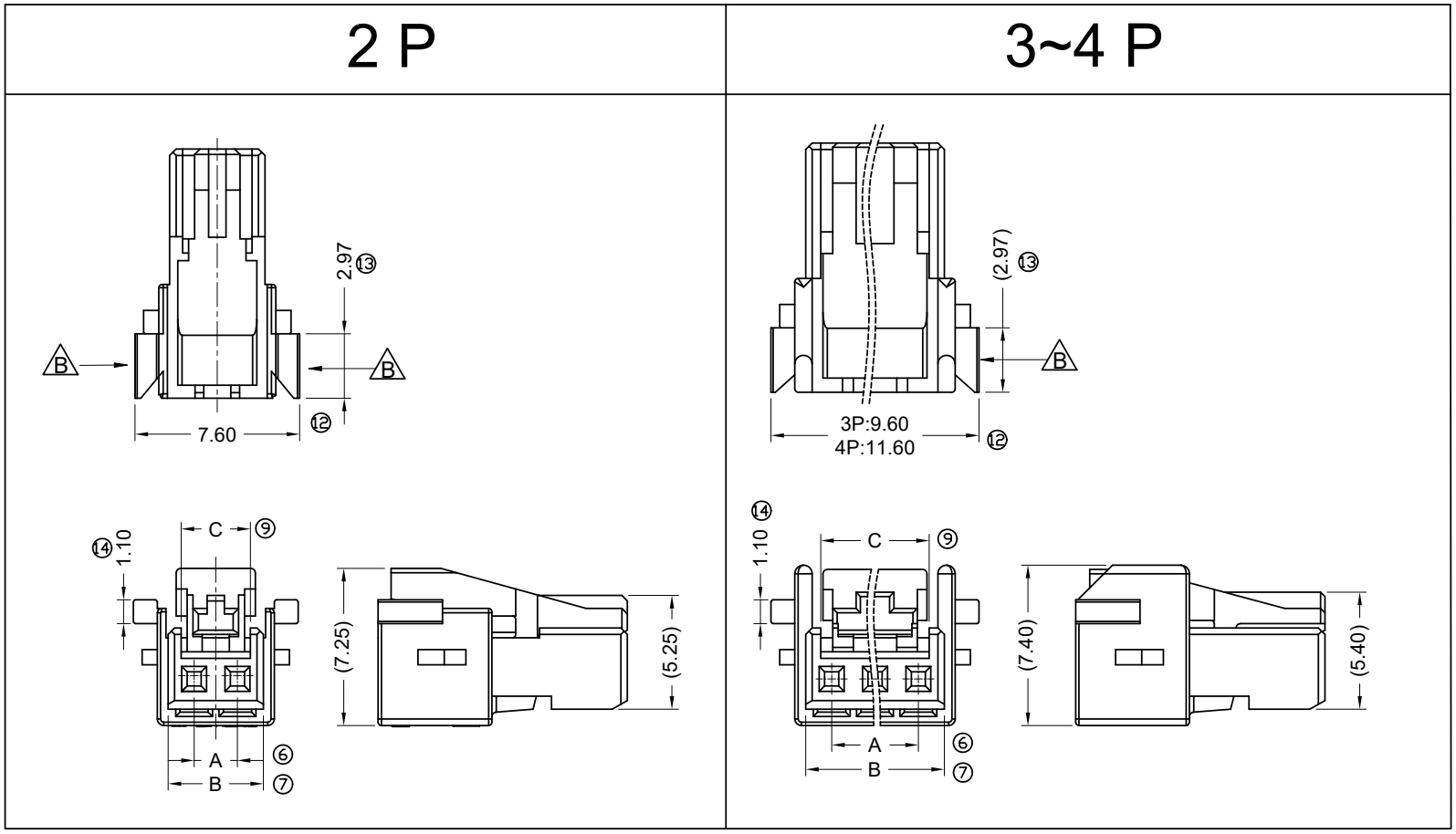

DATE	REV	ECN NO.	DESCRIPTION	MODIFY	APPROVAL
2020.03.28	C	ER2020032802	Add material marking	Xiaohu Jiang	Harvey Yan
2019.10.07	B		Add fool-proof feature for 2p~4p	Larry Yang	Harvey Yan

GENERAL TOLERANCE
.X ±0.30
.XX ±0.20
.XXX ±0.10
X.° ±2°
PROJECT

东莞市思索连接器有限公司
SWB CONNECTORS CO.,LTD

APPROVAL	CHECK	DRAWN	DATE
Kim Huang	Harvey Yan	Larry Yang	2019/10/07

PART NO. 2019H-1xXX-N0NBR01Q

TITLE 2.00mm Connector Housing (Retainer mountable type)

UNIT	SCALE	SHEET	REV	NUMBER
mm	1:1	2/2	C	A-022

东莞市思索连接器有限公司 WWW.SWB.tw APPROVED 研发中心 SWB Connectors Co.,Ltd.

RoHS | This products can apply to the SWB Doc NO. QA-3-04-005 of Environmental&Material Management Rules

RD-1

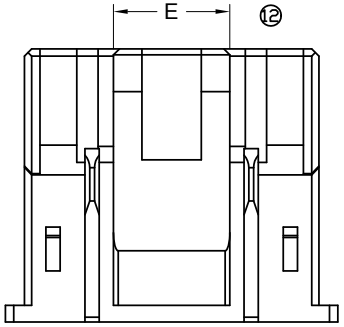

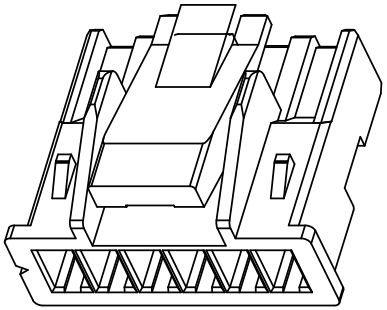

■ Specifications :

- Voltage rating: 250V AC / DC
- Current rating: 3A AC / DC
- Withstanding voltage: 800V AC/minute
- Temperature range: -40°C~+125°C
- Insulation resistance:≥1000MΩ
- Contact resistance: ≤10mΩ
- After environmental testing: ≤20mΩ

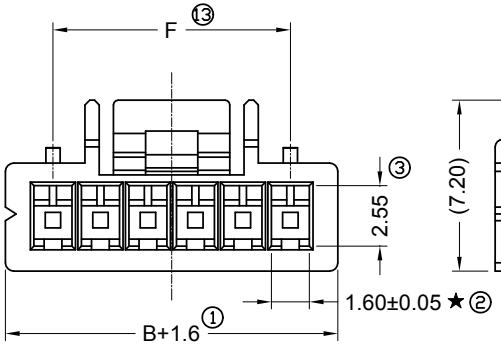

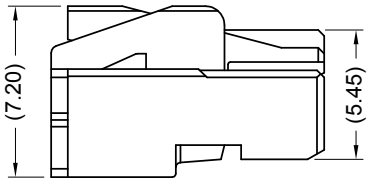

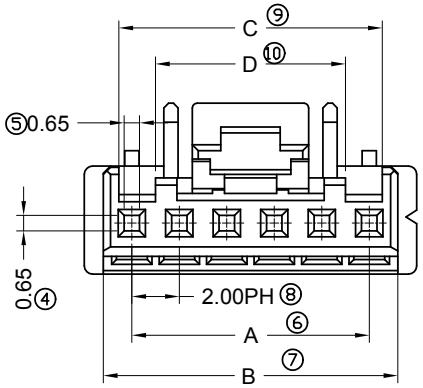

2019 H -1xXX -N0 N B R 01 Q
① ② ③ ④ ⑤ ⑥ ⑦ ⑧ ⑨

① Series No.
② Category：H-HSG
③ Row No.-Pin No.: 1xXX-06P~15P
④ Material : N0-PA66 94V-0
⑤ Color : N-Natural
⑥ Packing: B-Bag
⑦ R-RoHS
⑧ Special No.:
⑨ Q-Vehicle products

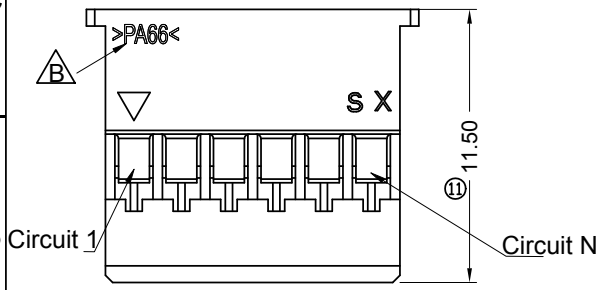

Poles	Dimensions (mm)						Poles	Dimensions (mm)					
	A	B	C	D	E	F		A	B	C	D	E	F
06	10.00	12.40	11.10	8.00	4.90	10.00	11	20.00	22.40	21.10	14.60	11.40	17.40
07	12.00	14.40	13.10	8.00	4.90	10.00	12	22.00	24.40	23.10	14.60	11.40	17.40
08	14.00	16.40	15.10	8.00	4.90	10.00	13	24.00	26.40	25.10	14.60	11.40	17.40
09	16.00	18.40	17.10	8.00	4.90	12.00	14	26.00	28.40	27.10	14.60	11.40	17.40
10	18.00	20.40	19.10	14.60	11.40	17.40	15	28.00	30.40	29.10	14.60	11.40	17.40

2019H-1xXX-N0NBR01Q	Nylon 66 94V-0	C2019	2019T	2000W
PART N0	Material	Suitable SWB Retainer	Suitable SWB Terminal	Suitable SWB Header

DATE	REV	ECN NO.	DESCRIPTION	MODIFY	APPROVAL
2020.03.28	B	ER2020032802	Add material marking	Xiaohu Jiang	Harvey Yan

GENERAL TOLERANCE
.X ±0.30
.XX ±0.20
.XXX ±0.10
X.° ±2°
PROJECT

东莞市思索连接器有限公司
SWB CONNECTORS CO.,LTD

APPROVAL	CHECK	DRAWN	DATE
Kim Huang	Harvey Yan	Larry Yang	2019/07/18

PART NO. 2019H-1xXX-N0NBR01Q

TITLE 2.00mm Connector Housing (Retainer mountable type)

UNIT	SCALE	SHEET	REV	NUMBER
mm	1:1	1/1	B	A-022

RD-1

RoHS This products can apply to the SWB Doc NO. QA-3-04-005 of Environmental&Material Management Rules

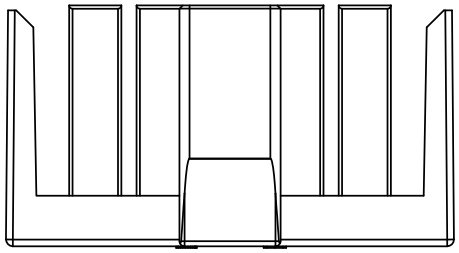

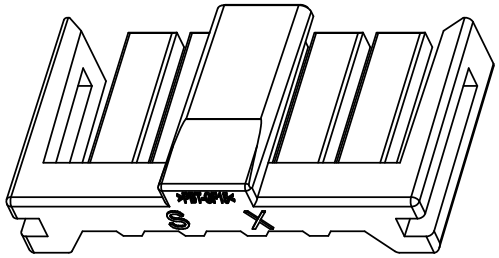

■ Specifications :

- Voltage rating: 250V AC / DC
- Current rating: 3A AC / DC
- Withstanding voltage: 800V AC/minute
- Temperature range: −40°C~+125°C
- Insulation resistance: ≥1000MΩ
- Contact resistance: ≤10mΩ
- After environmental testing: ≤20mΩ

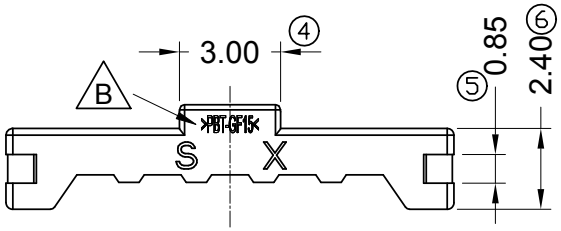

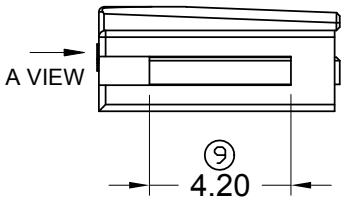

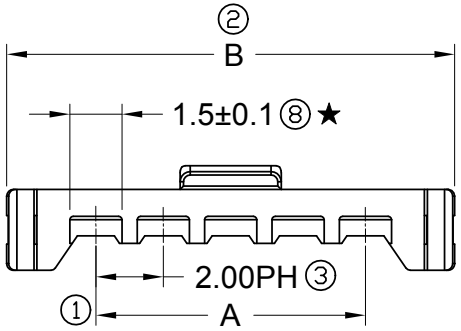

C2019 -1xXX -PT N B R 01 Q
① ② ③ ④ ⑤ ⑥ ⑦ ⑧

① Series No.
② Row No.−Pin No.: 1xXX−02P~05P
③ Material : PT−PBT 94V−0
④ Color : N−Natural
⑤ Packing: B−Bag
⑥ R−RoHS
⑦ Special No.:
⑧ Q−Vehicle products

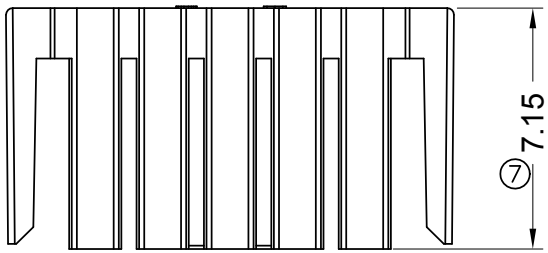

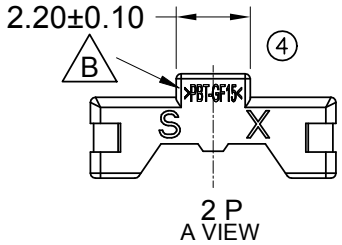

Poles	Dimensions (mm)	
	A	B
02	2.00	7.3
03	4.00	9.3
04	6.00	11.3
05	8.00	13.3

东莞市思索连接器有限公司 WWW.SWB.tw APPROVED 研发中心 SWB Connectors Co.,Ltd

C2019-1xXX-PTNBR01Q	PBT 94V-0	2019H	2019T	2000W
PART N0	Material	Suitable SWB Housing	Suitable SWB Terminal	Suitable SWB Header

DATE	REV	ECN NO.	DESCRIPTION	MODIFY	APPROVAL
2020.06.12	B	ER2020032801	Add material marking	Xiaohu Jiang	Harvey Yan

GENERAL TOLERANCE
.X ±0.30
.XX ±0.20
.XXX ±0.10
X.° ±2°
PROJECT

东莞市思索连接器有限公司
SWB CONNECTORS CO.,LTD

APPROVAL	CHECK	DRAWN	DATE
Kim Huang	Harvey Yan	Larry Yang	2019/07/18

PART NO. C2019-1xXX-PTNBR01Q

TITLE 2.00mm Connector TPA

UNIT	SCALE	SHEET	REV	NUMBER
mm	1:1	1/1	B	A-022

RD-1

RoHS This products can apply to the SWB Doc NO. QA-3-04-005 of Environmental&Material Management Rules

Material marking:
H-C7025
Blank(no mark)-C5191

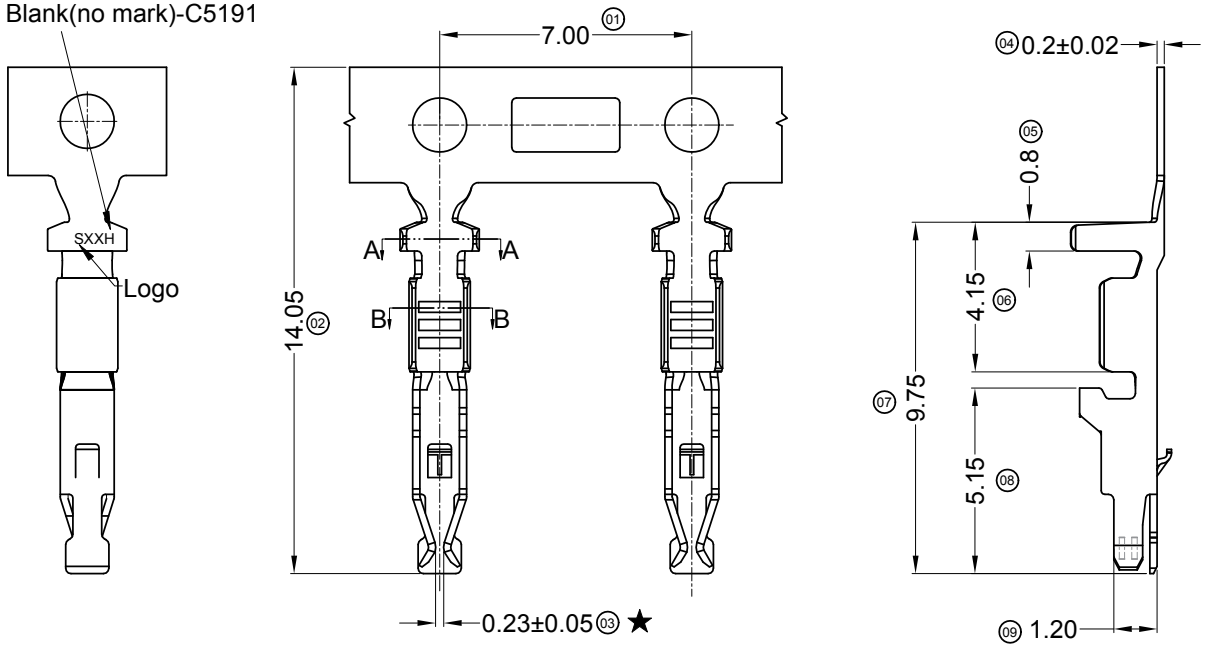

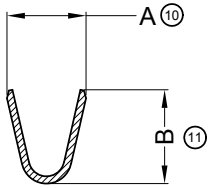

SECTION: A-A
SCALE: 1:1

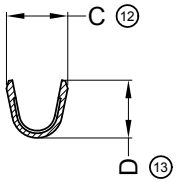

SECTION: B-B
SCALE: 1:1

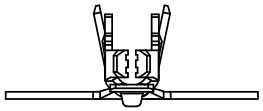

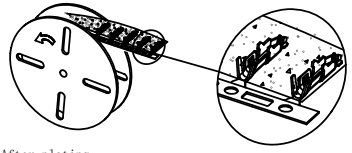

After plating

Scale 4:1

■ Specifications :

- Voltage rating: 250V AC / DC
- Current rating: 3A AC / DC
- Withstanding voltage: 800V AC/minute
- Temperature range: -40°C~+105°C(C5191)
  -40°C~+125°C(C7025)
- Insulation resistance:≥1000MΩ
- Contact resistance: ≤10mΩ
- After environmental testing：≤20mΩ
- Suitable SWB Housing:2019H

2019 T - X XX X X - 01 Q
① ② ③ ④ ⑤ ⑥ ⑦ ⑧

东莞市思索连接器有限公司 WWW.SWB.tw APPROVED 研发中心 SWB Connectors Co.,Ltd.

① Series No.
② Category：T-Terminal
③ Material: P-C5191 H-C7025
④ Plating Code:
08-40~120u"(1~3um)Ni,80~200u"(2~5um)Tin
Y2-40~120u"(1~3um)Tin A2
⑤ Plating Process : S-Stamping before Plating
P-Stamping after Plating A1
⑥ Barrel type:H-High Barrel;Blank-Low Barrel
⑦ Mold No./Mark/Special No.
⑧ Q-Vehicle products

P/N	Wire Size	DIM A	DIM B	DIM C	DIM D
2019T-XXXXH-01Q	0.35mm²~0.5mm² (22 AWG~20 AWG) OD=1.6Max.	2.20	2.60	1.80	1.70
2019T-XXXX-01Q	0.22mm²~0.35mm² (24AWG~22AWG) OD=1.3Max.	2.20	2.60	1.70	1.60

DATE	REV	ECN NO.	DESCRIPTION	MODIFY	APPROVAL
2020/09/25	A2		Add plating code"Y2"	Xiaohu Jiang	Harvey Yan
2020/09/04	A1		Add plating process code"P"	Xiaohu Jiang	Harvey Yan

GENERAL TOLERANCE
.X ±0.30
.XX ±0.20
.XXX ±0.10
X.° ±2°
PROJECT

东莞市思索连接器有限公司
SWB CONNECTORS CO.,LTD

APPROVAL	CHECK	DRAWN	DATE
Kim Huang	Harvey Yan	Xiaohu Jiang	2020/03/26

PART NO. 2019T-XXXXX-01Q
TITLE 2.00mm Crimp Style Terminal

UNIT	SCALE	SHEET	REV	NUMBER
mm	5：1	1/1	A2	A-000

RoHS | This products can apply to the SWB Doc NO. QA-3-04-005 of Environmental&Material Management Rules

RD-1

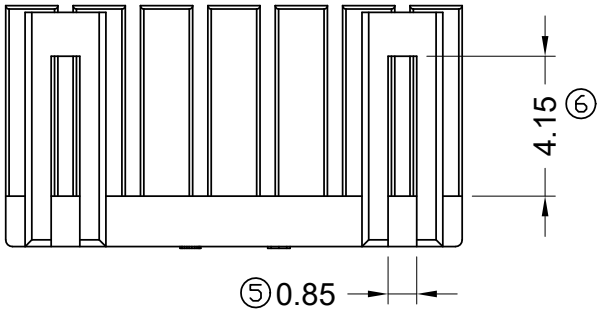

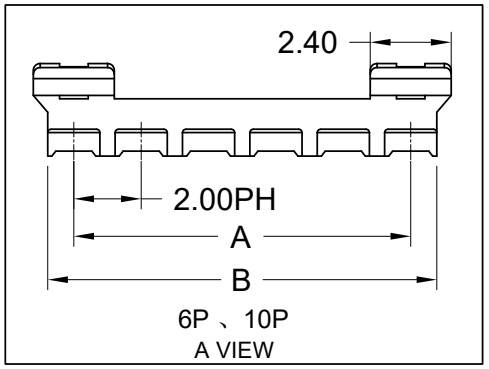

■Specifications :

- Voltage rating: 250V AC / DC
- Current rating: 3A AC / DC
- Withstanding voltage: 800V AC/minute
- Temperature range: −40°C~+125°C
- Insulation resistance:≥1000MΩ
- Contact resistance: ≤10mΩ
- After environmental testing: ≤20mΩ

C2019 -1xXX -4T N B R 01 Q
① ② ③ ④ ⑤ ⑥ ⑦ ⑧

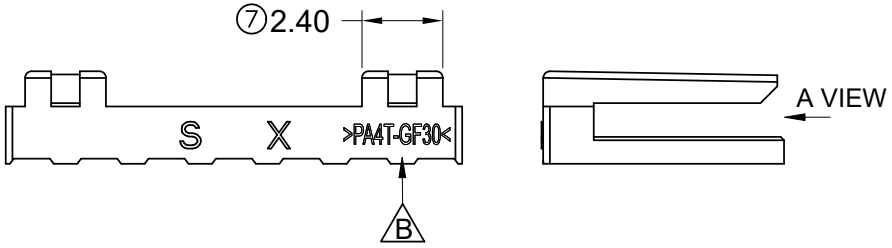

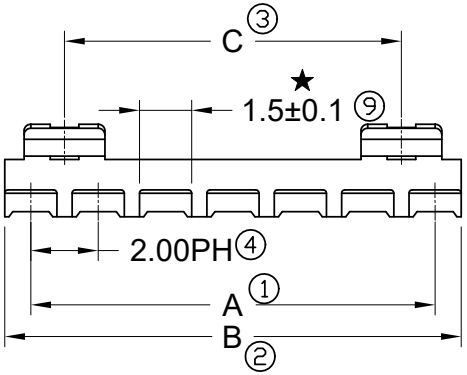

①Series No.
②Row No.−Pin No.: 1xXX−06P~15P
③Material : 4T−PA4T 94V−0
④Color : N−Natural
⑤Packing:B−Bag
⑥R−RoHS
⑦Special No.:
⑧Q−Vehicle products

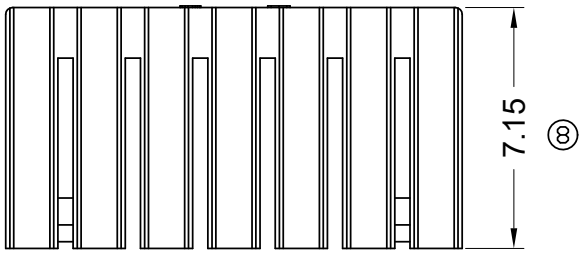

东莞市思索连接器有限公司 www.SWB.tw APPROVED 研发中心 SWB Connectors Co., Ltd.

Poles	Dimensions (mm) A	B	C	Poles	Dimensions (mm) A	B	C
06	10.00	11.55	10.00	11	20.00	21.55	17.40
07	12.00	13.55	10.00	12	22.00	23.55	17.40
08	14.00	15.55	10.00	13	24.00	25.55	17.40
09	16.00	17.55	12.00	14	26.00	27.55	17.40
10	18.00	19.55	17.40	15	28.00	29.55	17.40

C2019-1xXX-4TNBR01Q	PA4T 94V-0	2019H	2019T	2000W
PART N0	Material	Suitable SWB Housing	Suitable SWB Terminal	Suitable SWB Header

DATE	REV	ECN NO.	DESCRIPTION	MODIFY	APPROVAL
2020.06.12	B	ER2020032801	Add material marking	Xiaohu Jiang	Harvey Yan

GENERAL TOLERANCE
.X ±0.30
.XX ±0.20
.XXX ±0.10
X.° ±2°
PROJECT

东莞市思索连接器有限公司
SWB CONNECTORS CO.,LTD

APPROVAL	CHECK	DRAWN	DATE
Kim Huang	Harvey Yan	Larry Yang	2019/08/08

PART NO. C2019-1xXX-4TNBR01Q
TITLE 2.00mm Connector TPA

UNIT	SCALE	SHEET	REV	NUMBER
mm	1:1	1/1	B	A-022

RD-1

RoHS This products can apply to the SWB Doc NO. QA-3-04-005 of Environmental&Material Management Rules

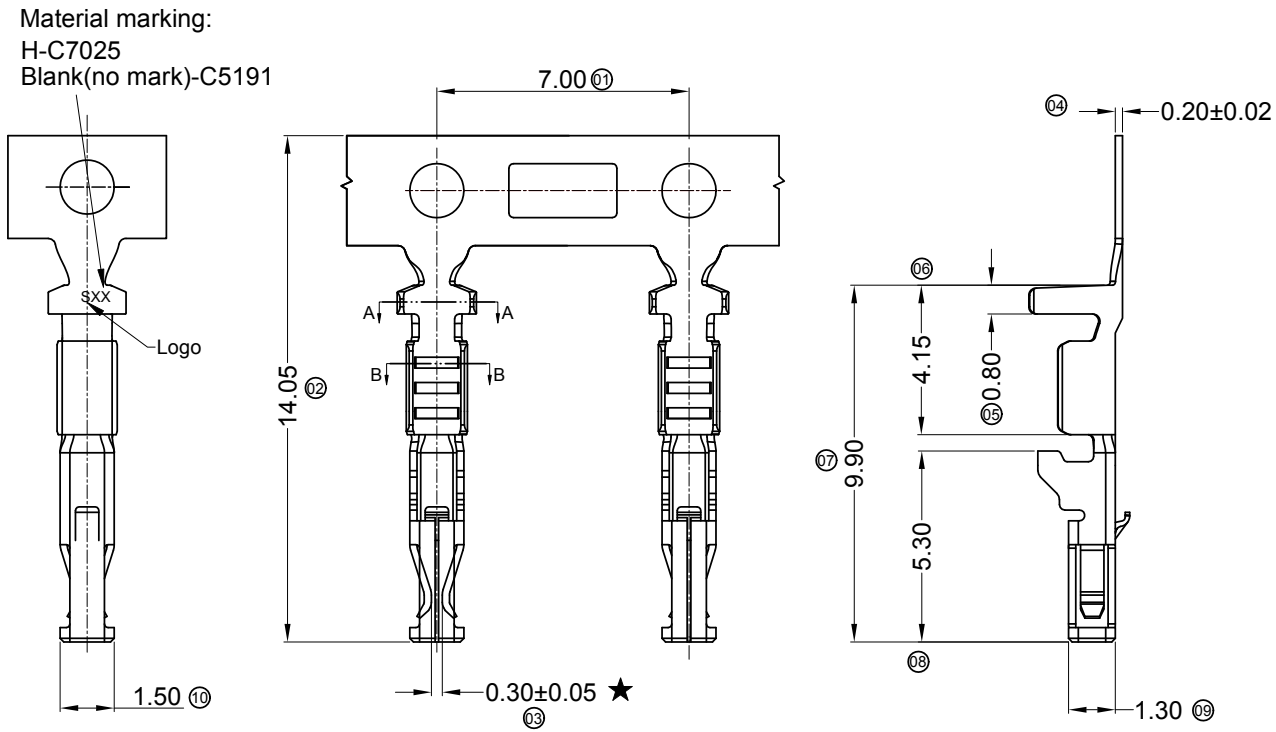

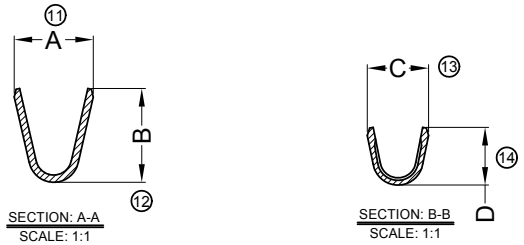

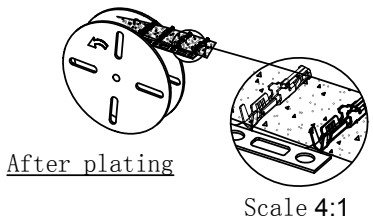

■ Specifications :

- Voltage rating: 250V AC / DC
- Current rating: 3A AC / DC
- Withstanding voltage: 800V AC/minute
- Temperature range: -40°C~+105°C(C5191)
  -40°C~+125°C(C7025)
- Insulation resistance:≥1000MΩ
- Contact resistance: ≤10mΩ
- After environmental testing：≤20mΩ
- Suitable SWB Housing:2019H

2019 T - X XX X X - 02 Q
① ② ③ ④ ⑤ ⑥ ⑦ ⑧

① Series No.
② Category：T-Terminal
③ Material: P-C5191 H-C7025
④ Plating Code:
08-40~120u"(1~3um)Ni,80~200u"(2~5um)Tin
Y2-40~120u"(1~3um)Tin A2
⑤ Plating Process : S-Stamping before Plating
P-Stamping after Plating A1
⑥ Barrel type:H-High Barrel;Blank-Low Barrel
⑦ Mold No./Mark/Special No.
⑧ Q-Vehicle products

东莞市思索连接器有限公司 SWB Connectors Co.,Ltd. WWW.SWB.tw APPROVED 研发中心

P/N	Wire Size	DIM A	DIM B	DIM C	DIM D
2019T-XXXXH-02Q	0.35mm²~0.5mm² (22 AWG~20 AWG) OD=1.6Max.	2.20	2.60	1.80	1.70
2019T-XXXX-02Q	0.22mm²~0.35mm² (24AWG~22AWG) OD=1.3Max.	2.20	2.60	1.70	1.60

DATE	REV	ECN NO.	DESCRIPTION	MODIFY	APPROVAL
2020/09/25	A2		Add plating code"Y2"	Xiaohu Jiang	Harvey Yan
2020/09/04	A1		Add plating process code"P"	Xiaohu Jiang	Harvey Yan

GENERAL TOLERANCE
.X ±0.30
.XX ±0.20
.XXX ±0.10
X.° ±2°
PROJECT

东莞市思索连接器有限公司
SWB CONNECTORS CO.,LTD

APPROVAL	CHECK	DRAWN	DATE
Kim Huang	Harvey Yan	Xiaohu Jiang	2020/06/15

PART NO. 2019T-XXXXX-02Q
TITLE 2.00mm Crimp Style Connectors

UNIT	SCALE	SHEET	REV	NUMBER
mm	1：1	1/1	A2	A-000

RoHS	This products can apply to the SWB Doc NO. QA-3-04-005 of Environmental&Material Management Rules

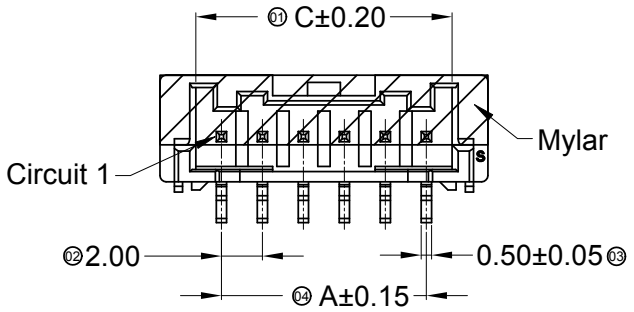

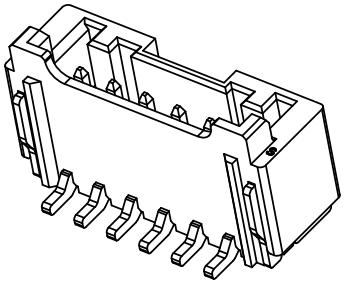

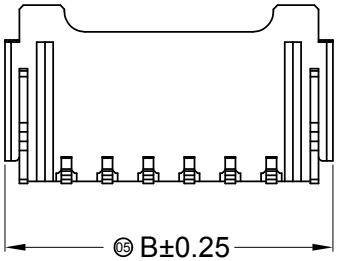

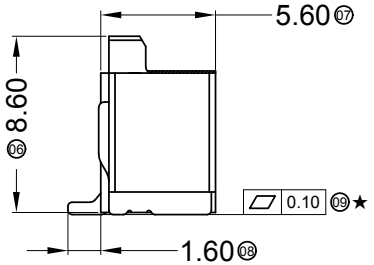

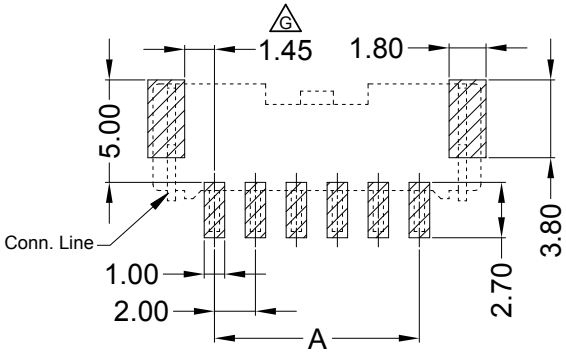

Recommended P.C.B Layout
General Tolerance±0.05

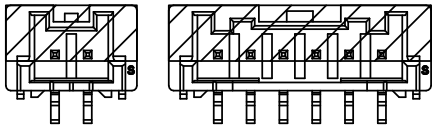

2P-4P
SCALE 0.8:1

5P-9P
SCALE 0.8:1

02P~09P With Single salient point
10P~16P With Double salient point

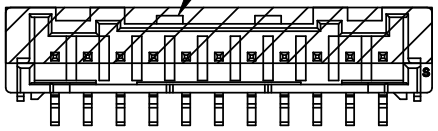

10P-16P
SCALE 0.8:1

■ Specifications :

- Voltage rating: 250V AC / DC
- Current rating: 3A AC / DC
- Withstanding voltage: 800V AC/minute
- Temperature range: -40°C~+105°C
- Insulation resistance:≥1000MΩ
- Contact resistance: ≤10mΩ
- After environmental testing：≤20mΩ
- Material(Pin)：Brass
- Material(Solder Tabs)：Brass
- Mates With SWB Housing：2000H
- "★" Critical dimension

2000 W V S-XX X -9T SW XX X
① ② ③ ④ ⑤ ⑥ ⑦ ⑧ ⑨ ⑩

① Series No.
② Category：W-WAFER
③ Connector type：V-Stright 180°
④ Mouting type: S-SMT
⑤ Row No.-Pin No per row: XX-02P~16P
⑥ Plug the Pin & Special No.
⑦ Material: 9T -PA9T 94V-0
LP -LCP 94V-0
⑧ Plating Code: SN-Bright Tin ; SW-Matte Tin
⑨ Color : Blank-Natural Color
⑩ Packing: Blank-Reel ,With Mylar
R-Reel ,Without Mylar

Poles	Dimensions (mm)			Poles	Dimensions (mm)		
	A	B	C		A	B	C
02	2.00	8.00	4.50	10	18.00	24.00	20.50
03	4.00	10.00	6.50	11	20.00	26.00	22.50
04	6.00	12.00	8.50	12	22.00	28.00	24.50
05	8.00	14.00	10.50	13	24.00	30.00	26.50
06	10.00	16.00	12.50	14	26.00	32.00	28.50
07	12.00	18.00	14.50	15	28.00	34.00	30.50
08	14.00	20.00	16.50	16	30.00	36.00	32.50
09	16.00	22.00	18.50				

DATE	REV	ECN NO	DESCRIPTION	MODIFY	APPROVAL
2020/03/19	I	EN20200319001	Update Drawing Frame Add LCP Material	Wzbin	Robing
2018/05/31	H	ER20180531001	Modify the drawing frame format	Alan qin	Smark
2015/09/24	G		Modify Layout Size G	Wuxiaotao	Jova Lau

GENERAL TOLERANCE
.X ±0.30
.XX ±0.20
.XXX ±0.10
X.° ±2°
PROJECT

东莞市思索连接器有限公司
SWB CONNECTORS CO.,LTD

APPROVAL	CHECK	DRAWN	DATE
Smark	Joshua	Alan qin	2018/05/31

PART NO.
2000WVS-XX-XXSWXXX

TITLE
2.00mm Crimp Style Connector

UNIT	SCALE	SHEET	REV	NUMBER
mm	1:1	1/1	I	A-000

RoHS	This products can apply to the SWB Doc NO. QA-3-04-005 of Environmental&Material Management Rules

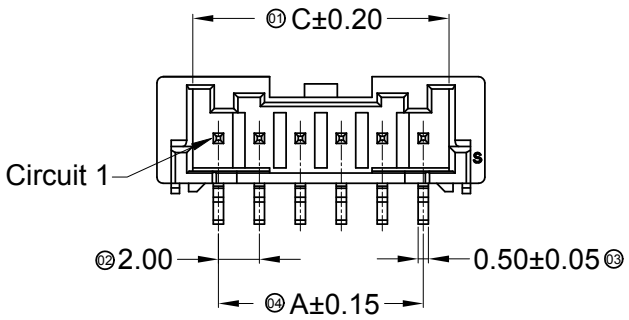

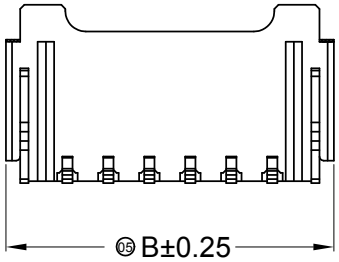

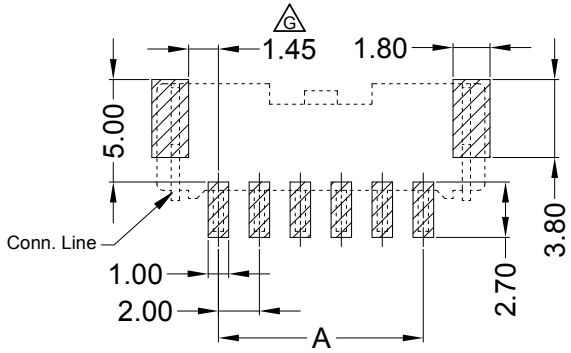

Recommended P.C.B Layout
General Tolerance±0.05

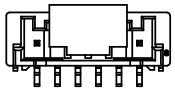

CAP（9-16P With CAP）
SCALE 1:2

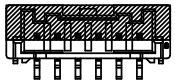

Mylar（2~8P With Mylar）
SCALE 1:2

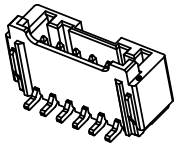

SCALE 1:2

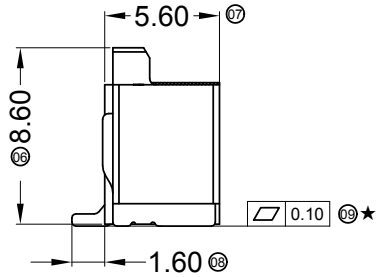

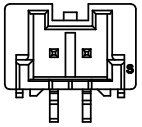

2P-4P
SCALE 0.8:1

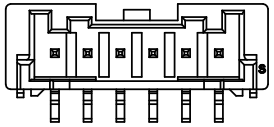

5P-9P
SCALE 0.8:1

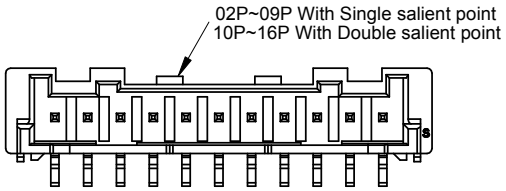

10P-16P
SCALE 0.8:1

■ Specifications :

- Voltage rating: 250V AC / DC
- Current rating: 3A AC / DC
- Withstanding voltage: 800V AC/minute
- Temperature range: -40°C~+105°C
- Insulation resistance:≥1000MΩ
- Contact resistance: ≤10mΩ
- After environmental testing：≤20mΩ
- Material(Pin)：Brass
- Material(Solder Tabs)：Brass
- Mates With SWB Housing：2000H
- "★" Critical dimension

2000	W	V	S-XX	X	-9T	SW	XX	X	-S
①	②	③	④	⑤	⑥	⑦	⑧	⑨	⑩

① Series No.
② Category：W-WAFER
③ Connector type：V-Stright 180°
④ Mouting type: S-SMT
⑤ Pin number: XX-02P~16P
⑥ Plug the Pin & Special No.
⑦ Material: 9T -PA9T 94V-0
⑧ Plating Code: SN-Bright Tin ; SW-Matte Tin
⑨ Color : Blank-Natural Color
⑩ Packing: Blank-Reel ,2~8P With Mylar
9-16P With CAP
R-Reel ,Without Mylar&CAP

东莞市思索连接器有限公司 WWW.SWB.tw APPROVED 研发中心 SWB Connectors Co.,Ltd

Poles	Dimensions (mm)			Poles	Dimensions (mm)		
	A	B	C		A	B	C
02	2.00	8.00	4.50	10	18.00	24.00	20.50
03	4.00	10.00	6.50	11	20.00	26.00	22.50
04	6.00	12.00	8.50	12	22.00	28.00	24.50
05	8.00	14.00	10.50	13	24.00	30.00	26.50
06	10.00	16.00	12.50	14	26.00	32.00	28.50
07	12.00	18.00	14.50	15	28.00	34.00	30.50
08	14.00	20.00	16.50	16	30.00	36.00	32.50
09	16.00	22.00	18.50				

DATE	REV	ECN NO	DESCRIPTION	MODIFY	APPROVAL
2020/03/19	I	EN20200319001	Update Drawing Frame	Wzbin	Robing
2018/05/31	H	ER20180531001	Modify the drawing frame format	Alan qin	Smark
2015/09/24	G		Modify Layout Size G	Wuxiaotao	Jova Lau

GENERAL TOLERANCE
.X ±0.30
.XX ±0.20
.XXX ±0.10
X.° ±2°
PROJECT

东莞市思索连接器有限公司
SWB CONNECTORS CO.,LTD

APPROVAL	CHECK	DRAWN	DATE
Smark	Joshua	Alan qin	2018/05/31

PART NO.
2000WVS-XX-9TSWXXX-S

TITLE
2.00mm Crimp Style Connector

UNIT	SCALE	SHEET	REV	NUMBER
mm	1:1	1/1	I	A-000

RoHS	This products can apply to the SWB Doc NO. QA-3-04-005 of Environmental&Material Management Rules

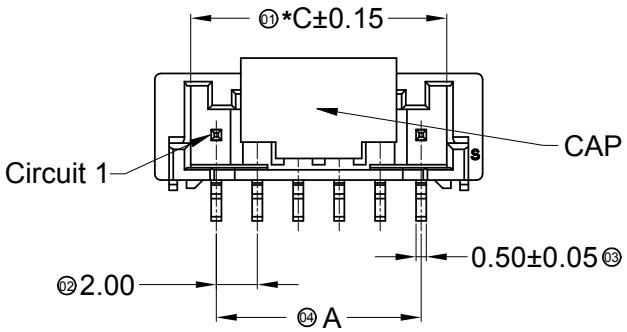

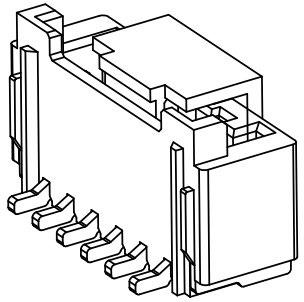

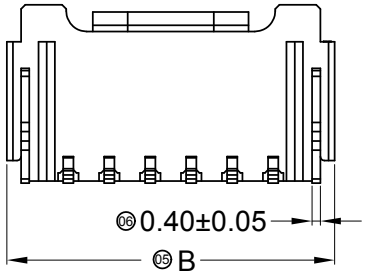

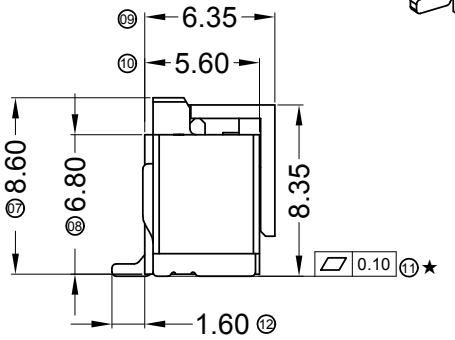

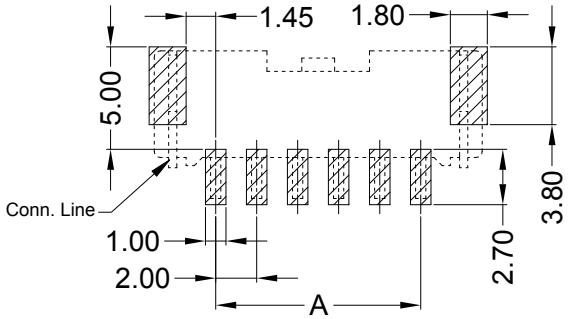

Recommended P.C.B Layout
General Tolerance±0.05

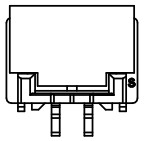

2P-4P
SCALE 0.8:1

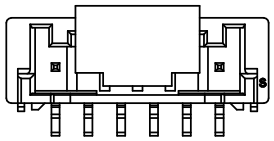

5P-9P
SCALE 0.8:1

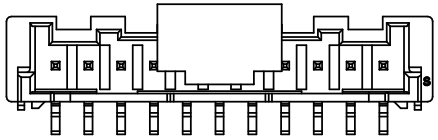

10P-16P
SCALE 0.8:1

■ Specifications :

- Voltage rating: 250V AC / DC
- Current rating: 3A AC / DC
- Withstanding voltage: 800V AC/minute
- Temperature range: -40°C~+105°C (B)
- Insulation resistance:≥1000MΩ
- Contact resistance: ≤10mΩ
- After environmental testing：≤20mΩ
- Material(Pin)：Brass
- Material(Solder Tabs)：Brass
- Mates With SWB Housing：2000H
- "★" Critical dimension

2000	W	V	S-XX	X	-9T	SW	XX	X
①	②	③	④	⑤	⑥	⑦	⑧	⑨	⑩

① Series No.
② Category：W-WAFER
③ Connector type：V-Stright 180°
④ Mouting type: S-SMT
⑤ Row No.-Pin No: XX-02P~16P
⑥ Plug the Pin & Special No: C- With CAP
⑦ Material: 9T -PA9T 94V-0
LP-LCP 94V-0
⑧ Plating Code: SW-Matte Tin
⑨ Color : Blank-Natural Color
⑩ Packing: Blank-Reel

Poles	Dimensions (mm)			Poles	Dimensions (mm)		
	A	B	C		A	B	C
02	2.00	8.00	4.50	10	18.00	24.00	20.50
03	4.00	10.00	6.50	11	20.00	26.00	22.50
04	6.00	12.00	8.50	12	22.00	28.00	24.50
05	8.00	14.00	10.50	13	24.00	30.00	26.50
06	10.00	16.00	12.50	14	26.00	32.00	28.50
07	12.00	18.00	14.50	15	28.00	34.00	30.50
08	14.00	20.00	16.50	16	30.00	36.00	32.50
09	16.00	22.00	18.50				

DATE	REV	ECN NO	DESCRIPTION	MODIFY	APPROVAL
2020/03/20	C	EN20200319001	Update Drawing Frame Add LCP Material	Wzbin	Robing
2016/05/10	B	EN20160510001	定义2号尺寸公差&修改工作温度	WXT	Jova Lau

GENERAL TOLERANCE
.X ±0.30
.XX ±0.20
.XXX ±0.10
X.° ±2°
PROJECT

东莞市思索连接器有限公司
SWB CONNECTORS CO.,LTD

APPROVAL	CHECK	DRAWN	DATE
Smark	Joshua	Wuxiaotao	2014/05/06

PART NO.
2000WVS-XXC-XXSW

TITLE
2.00mm Crimp Style Connector

UNIT	SCALE	SHEET	REV	NUMBER
mm	1:1	1/1	C	A-000

RoHS	This products can apply to the SWB Doc NO. QA-3-04-005 of Environmental&Material Management Rules	RD-1

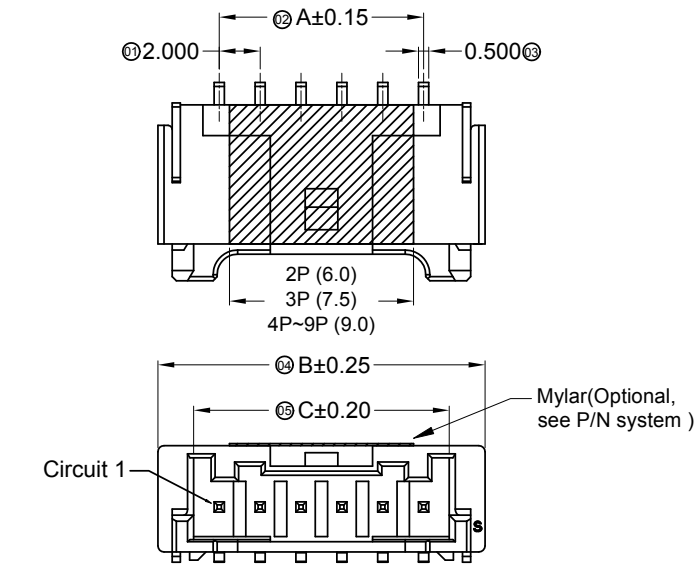

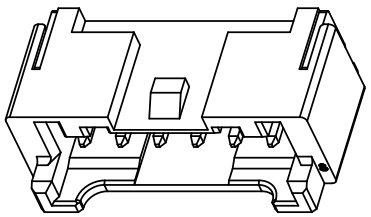

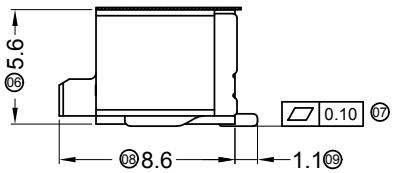

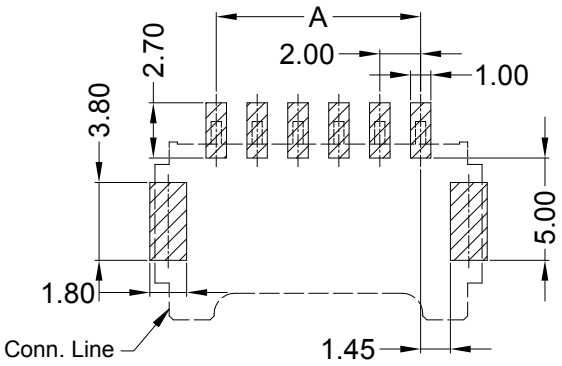

Recommended P.C.B Layout
General Tolerance±0.05

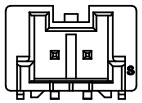

2P-4P
SCALE 1:0.8

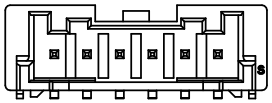

5P-9P
SCALE 1:0.8

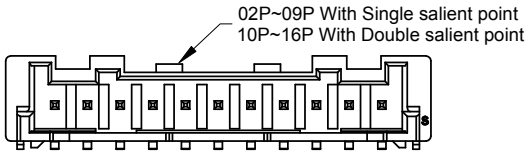

10P-16P
SCALE 1:0.8

■ Specifications :

- Voltage rating: 250V AC / DC
- Current rating: 3A AC / DC
- Withstanding voltage: 800V AC/minute
- Temperature range: -40°C~+105°C
- Insulation resistance:≥1000MΩ
- Contact resistance: ≤10mΩ
- After environmental testing：≤20mΩ

- Material(Pin)：Brass
- Material(Solder Tabs)：Brass
- Mates With SWB Housing：2000H

P/N system:

2000 W R S-XX X -XX SW XX X XX
① ② ③ ④ ⑤ ⑥ ⑦ ⑧ ⑨ ⑩ ⑪

① Series No.
② Category：W-WAFER
③ Connector type：R-Right Angle 90°
④ Mouting type: S-SMT
⑤ Row No.-Pin No per row: XX-02P~16P
⑥ Special No.
⑦ Material: 9T -PA9T 94V-0; LP -LCP 94V-0
⑧ Plating code: SW- Matte Tin
⑨ Color : Blank-Natural Color ; BK-Black Color
⑩ Packing: Blank-Reel ,With Mylar
R-Reel ,Without Mylar
⑪ Cover tape type: Blank-Adhesive ; RQ- Heat sealing

Poles	Dimensions (mm)			Poles	Dimensions (mm)		
	A	B	C		A	B	C
02	2.00	8.00	4.50	10	18.00	24.00	20.50
03	4.00	10.00	6.50	11	20.00	26.00	22.50
04	6.00	12.00	8.50	12	22.00	28.00	24.50
05	8.00	14.00	10.50	13	24.00	30.00	26.50
06	10.00	16.00	12.50	14	26.00	32.00	28.50
07	12.00	18.00	14.50	15	28.00	34.00	30.50
08	14.00	20.00	16.50	16	30.00	36.00	32.50
09	16.00	22.00	18.50				

DATE	REV	ECN NO	DESCRIPTION	MODIFY	APPROVAL
2020/09/23	M	EN120200923001	Add P/N for heat sealing cover tape	TengMin	Harvey Yan
2020/03/20	L	EN20200319001	Update Drawing Frame	Alan qin	Robing
2018/10/06	K	EN20181006003	Add Black specification	Alan qin	Smark

GENERAL TOLERANCE
.X ±0.30
.XX ±0.20
.XXX ±0.10
X.° ±2°
PROJECT

东莞市思索连接器有限公司
SWB CONNECTORS CO.,LTD

APPROVAL	CHECK	DRAWN	DATE
Smark	Joshua	Alan qin	2014/05/05

PART NO.
2000WRS-XX-XXSWXXX

TITLE
2.00mm Crimp Style Connector

UNIT	SCALE	SHEET	REV	NUMBER
mm	1:1	1/1	M	A-000

RoHS	This products can apply to the SWB Doc NO. QA-3-04-005 of Environmental&Material Management Rules

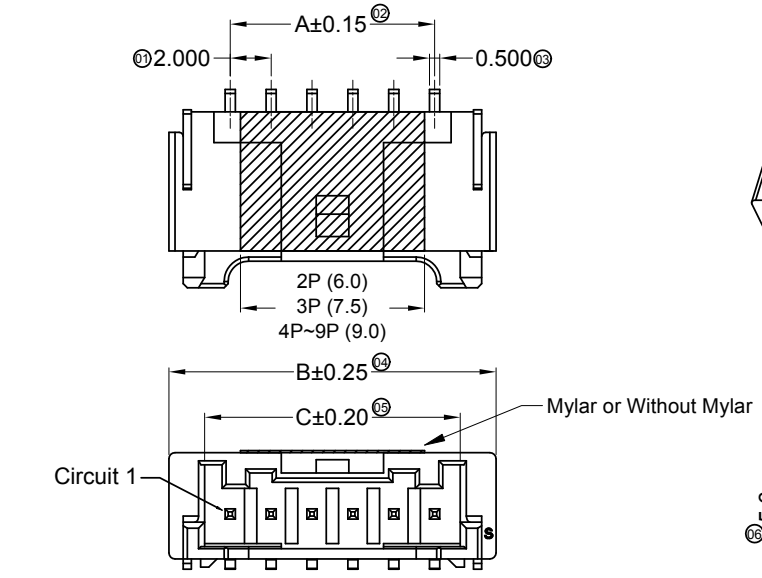

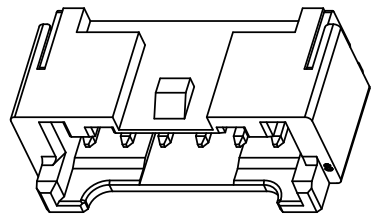

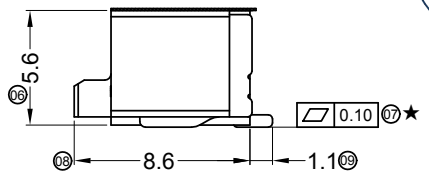

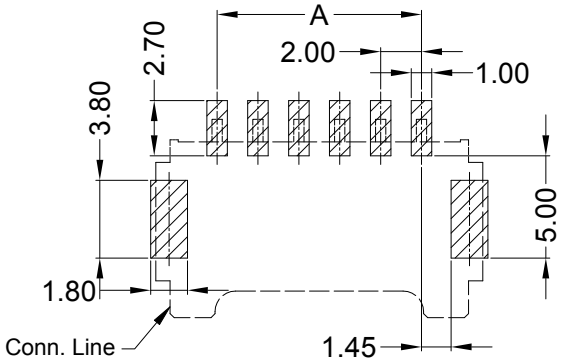

Recommended P.C.B Layout
General Tolerance±0.05

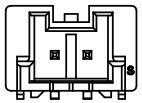

2P-4P
SCALE 1:0.8

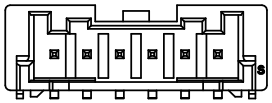

5P-9P
SCALE 1:0.8

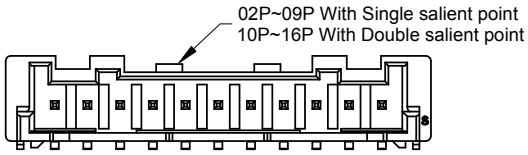

10P-16P
SCALE 1:0.8

■ Specifications :

- Voltage rating: 250V AC / DC
- Current rating: 3A AC / DC
- Withstanding voltage: 800V AC/minute
- Temperature range: -40°C~+105°C
- Insulation resistance:≥1000MΩ
- Contact resistance: ≤10mΩ
- After environmental testing：≤20mΩ
- "★" Critical dimension
- Material(Pin)：Brass
- Material(Solder Tabs)：Brass
- Mates With SWB Housing：2000H

2000 W R S-XX X -XX SW XX X-S
① ② ③ ④ ⑤ ⑥ ⑦ ⑧ ⑨ ⑩

① Series No.
② Category：W-WAFER
③ Connector type：R-Right Angle 90°
④ Mouting type: S-SMT
⑤ Row No.-Pin No per row: XX-02P~16P
⑥ Special No.
⑦ Material: 9T -PA9T 94V-0; LP -LCP 94V-0
⑧ Plating code: SW- Matte Tin
⑨ Color : Blank-Natural Color ; BK-Black Color
⑩ Packing: Blank-Reel ,02~09P With Mylar;
10~16P Without Mylar
R-Reel ,02~09P Without Mylar

Poles	Dimensions (mm)			Poles	Dimensions (mm)		
	A	B	C		A	B	C
02	2.00	8.00	4.50	10	18.00	24.00	20.50
03	4.00	10.00	6.50	11	20.00	26.00	22.50
04	6.00	12.00	8.50	12	22.00	28.00	24.50
05	8.00	14.00	10.50	13	24.00	30.00	26.50
06	10.00	16.00	12.50	14	26.00	32.00	28.50
07	12.00	18.00	14.50	15	28.00	34.00	30.50
08	14.00	20.00	16.50	16	30.00	36.00	32.50
09	16.00	22.00	18.50				

DATE	REV	ECN NO	DESCRIPTION	MODIFY	APPROVAL
2020/03/20	L	EN20200319001	Update Drawing Frame	Wzbin	Robing
2018/10/06	K	EN20181006003	Add Black specification	Alan qin	Smark
2015/12/28	J	ECR20151229001	Modify Mylar Size	sylvia	Jova Lau

GENERAL TOLERANCE
.X ±0.30
.XX ±0.20
.XXX ±0.10
X.° ±2°
PROJECT

东莞市思索连接器有限公司
SWB CONNECTORS CO.,LTD

APPROVAL	CHECK	DRAWN	DATE
Smark	Joshua	Alan qin	2014/05/05

PART NO.
2000WRS-XX-XXSWXXX-S

TITLE
2.00mm Crimp Style Connector

UNIT	SCALE	SHEET	REV	NUMBER
mm	1:1	1/1	L	A-000