RoHS	This products can apply to the SWB Doc NO. QA-3-04-005 of Environmental&Material Management Rules

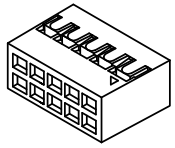

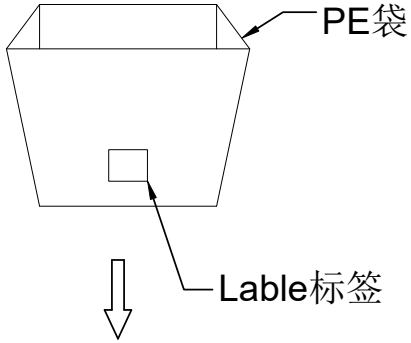

Note注解：

1. Put Housing in a PE bag, PE bag gauge for: 130 * 135 * 0.10 mm, Packing detail see the table below
   将 Housing放入PE袋内，PE袋规为:130*135*0.10mm,详细包装见下表
2. Put PE bag packed products in specifications of 330 * 250 * 300 mm cartons, Packing detail see the table below
   将装好产品的PE袋放入规格为330*250*200mm的纸箱内，详细包装见下表
3. Label depends on customer request, carton opening joint with transparent tape
   标签依客户要求而定，纸箱开口处用透明胶带贴合.

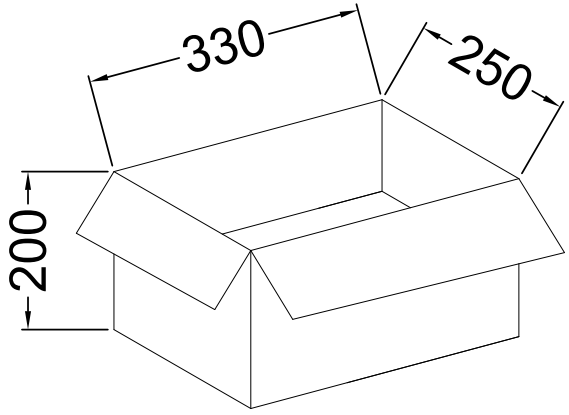

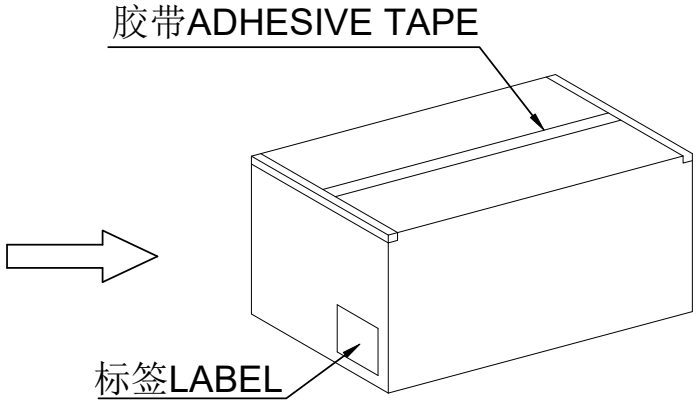

Poles	Bag PCS	CARTON Bag	CARTON PCS
2*02	1000	75	75K
2*03	1000	75	75K
2*04	1000	75	75K
2*05	1000	75	75K
2*06	1000	75	75K
2*07	1000	75	75K
2*08	1000	75	75K
2*09	1000	75	75K
2*10	1000	75	75K
2*11	1000	75	75K
2*12	1000	75	75K
2*13	1000	75	75K
2*14	1000	75	75K
2*15	1000	75	75K

DATE	REV	ECN N0.	DESCRIPTION	MODIFY	APPROVAL
2020.8.25	B	EN20200318002	Update Drawing Frame	YYting	Robing

GENERAL TOLERANCE
.X ±0.30
.XX ±0.20
.XXX ±0.10
X.° ±2°
PROJECT

东莞市思索连接器有限公司
SWB CONNECTORS CO.,LTD

APPROVAL	CHECK	DRAWN	DATE
Robing	YYting	Allen	2013/08/31

PART NO. 4601H-2*XXX-XXXX

TITLE 2.00mm Housing Package

UNIT	SCALE	SHEET	REV	NUMBER
mm	1:1	1/1	B	A-106

RoHS | This products can apply to the SWB Doc NO. QA-3-04-005 of Environmental&Material Management Rules

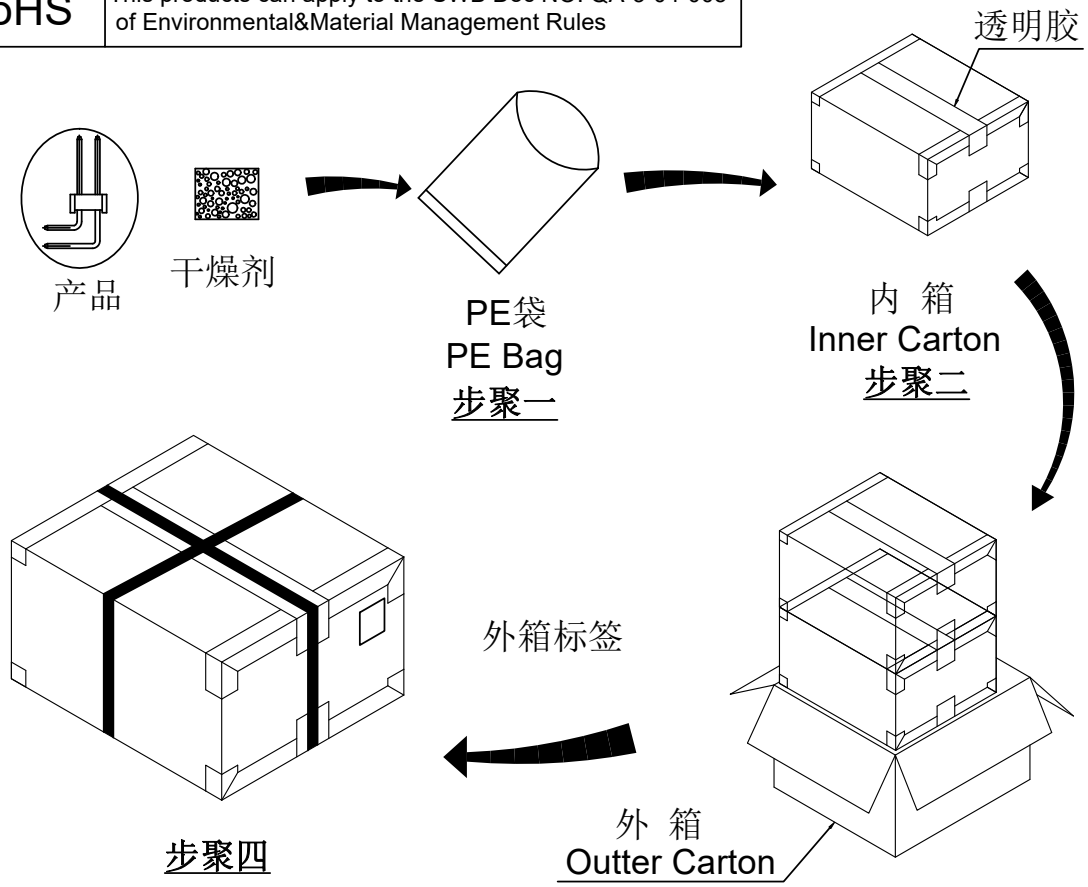

包装說明：

步驟1：將檢驗好之产品依包装数量装入PE袋中，并放入一包干燥剂，并将PE袋封好.贴上标签.

步驟2: 将装好产品的PE袋依包装数量，装入内箱并用透明胶四周封好.贴上标签.

步驟3: 将装好产品的内箱套入外箱. (一大箱装二小箱）

步驟4：用透明胶把外箱封好并在外箱上贴上标签.再用包扎带包扎好.

注：尾数可用填充物填充。

东莞市思索连接器有限公司 WWW.SWB.TW APPROVED 研发中心 SWB Connectors Co.,Ltd.

Part No.	PIN	PE Bag		Inner Carton		Outter Carton		Total
		PCS/PE	SIZE (CM)	BAG Inner Carton	SIZE (CM)	Inner Carton/ Outter Carton	SIZE (CM)	2 Inner Carton /Outter Carton
4601WR-2*05F-LPV01-A	10	500	15.4*20.4*0.0075	30	34*34*15.5	2	35*35*34	30,000

DATE	REV	ECN N0.	DESCRIPTION	MODIFY	APPROVAL
2020.8.19	B	EN20200318002	Update Drawing Frame	YYting	Robing

GENERAL TOLERANCE
.X ±0.30
.XX ±0.20
.XXX ±0.10
X.° ±2°
PROJECT

东莞市思索连接器有限公司
SWB CONNECTORS CO.,LTD

APPROVAL	CHECK	DRAWN	DATE
Robing	YYting	Joshua	2017/04/28

PART NO. 4601WR-2*XXF-LPV01-A

TITLE 2.54mm PIN Header Package

UNIT	SCALE	SHEET	REV	NUMBER
mm	1:1	1/1	B	A-106